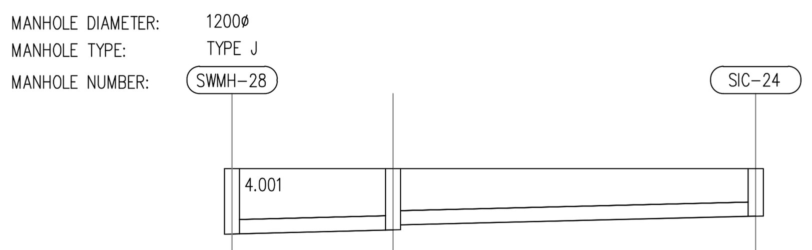

Datum (m)36.000

	SWMH-28				SIC-24
PN				S5.000	
DIA (mm)				225	
SLOPE (1:X)				200.0	
COVER LEVEL (m)	45.000		45.000		45.000
INVERT LEVEL (m)	43.968		44.032 44.107		44.250
LENGTH (m)				28.650	

SURFACE WATER SEWER FROM SIC-24 TO SWMH-28
HORIZONTAL SCALE 1:500
VERTICAL SCALE 1:100

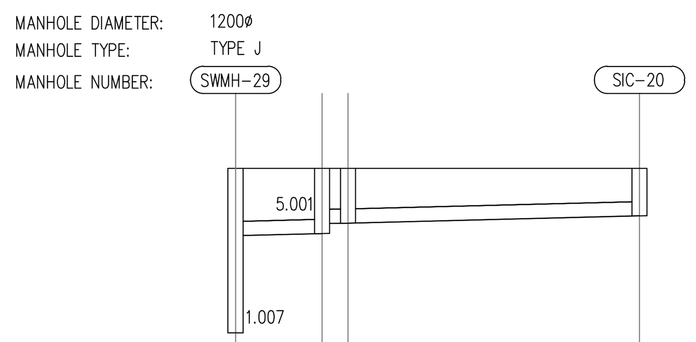

Datum (m)36.000

	SWMH-29						SIC-20
PN						S4.000	
DIA (mm)						225	
SLOPE (1:X)						200.0	
COVER LEVEL (m)	45.000		45.000				45.000
INVERT LEVEL (m)	43.934		43.968		44.135		44.250
LENGTH (m)						23.053	

SURFACE WATER SEWER FROM SIC-20 TO SWMH-29
HORIZONTAL SCALE 1:500
VERTICAL SCALE 1:100

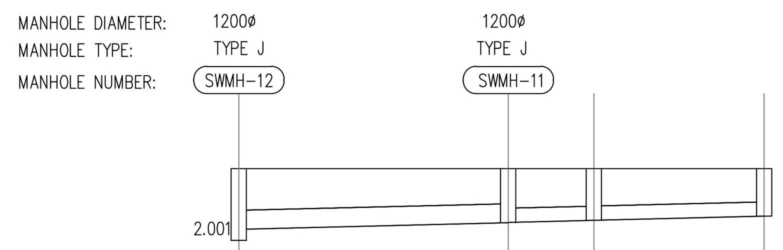

Datum (m)36.000

	SWMH-12		SWMH-11				
PN		S3.002					
DIA (mm)		300					
SLOPE (1:X)		200.0					
COVER LEVEL (m)	45.000		45.000		45.000		45.000
INVERT LEVEL (m)	44.041	21.296	44.147 44.149		44.183 44.183		44.250
LENGTH (m)							

SURFACE WATER SEWER FROM SWMH-11 TO SWMH-12
HORIZONTAL SCALE 1:500
VERTICAL SCALE 1:100

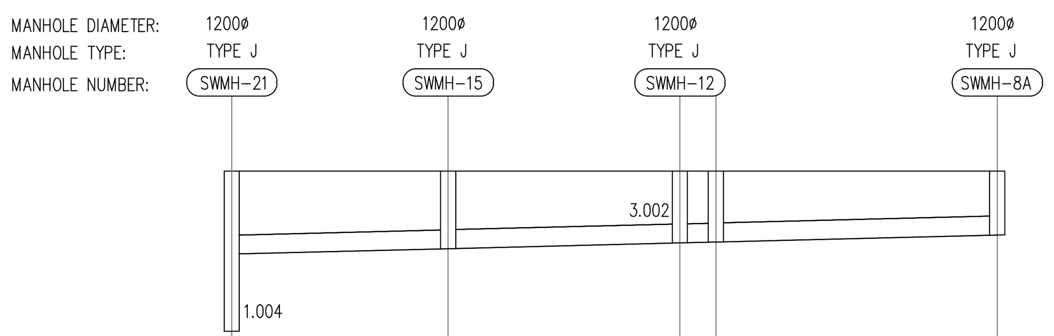

Datum (m)36.000

	SWMH-21		SWMH-15		SWMH-12				SWMH-8A
PN		S2.003		S2.002				S2.000	
DIA (mm)		300		300				300	
SLOPE (1:X)		200.0		200.0				200.0	
COVER LEVEL (m)	45.000		45.000		45.000		45.000		45.000
INVERT LEVEL (m)	43.687		43.773 43.773		43.865		43.879 43.879		43.990
LENGTH (m)		17.118		18.323				22.247	

SURFACE WATER SEWER FROM SWMH-8A TO SWMH-21
HORIZONTAL SCALE 1:500
VERTICAL SCALE 1:100

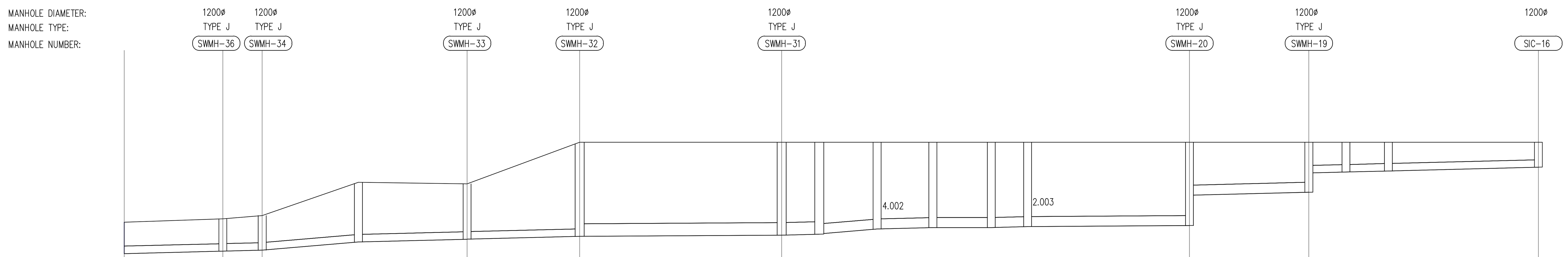

Datum (m)36.000

	S1.015		S1.013	S1.012	S1.011	S1.010	S1.004	S1.003	S1.000
PN	S1.015		S1.013	S1.012	S1.011	S1.010	S1.004	S1.003	S1.000
DIA (mm)	225		225	225	225	375	300	300	225
SLOPE (1:X)	200.0		58.5	206.0	200.0	843.0	737.0	200.0	200.0
LENGTH (m)	14.808		14.455	16.337	16.909	30.355	24.323	17.938	22.550

COVER LEVEL (m)	INVERT LEVEL (m)
42.600	41.658
42.700	41.732 41.732
42.800	41.762 41.762
43.800	42.009 42.009
43.750	42.088 42.091
45.000	42.176 42.176
45.000	42.212 42.212
45.000	42.240 42.248
45.000	42.397 42.397
45.000	42.439 42.439
45.000	42.440 42.440
45.000	42.467 42.467
45.000	42.500 43.410
45.000	43.500 44.077
45.000	44.105 44.105
45.000	44.137 44.137
45.000	44.250

SURFACE WATER SEWER FROM SWMH-16 TO SWMH-36
HORIZONTAL SCALE 1:500
VERTICAL SCALE 1:100

Job No.H081

PLANNING DRAWING.
NOT FOR CONSTRUCTION.
ALL LEVELS GIVEN ARE
RELATIVE TO ORDNANCE DATUM.
THIS DRAWING HAS BEEN ISSUED FOR INFORMATION PURPOSES ONLY AND MUST NOT BE USED FOR CONSTRUCTION UNDER ANY CIRCUMSTANCES

NOTES
1. For setting out refer to Architect's drawings.
2. This drawing to be read in conjunction with all other Architectural and Engineering drawings and all other relevant drawings and Specifications.
3. DO NOT SCALE THIS DRAWING. Use figured dimensions only.
4. No part of this document may be reproduced or transmitted in any form or stored in any retrieval system of any nature without the written permission as copyright holder except as agreed for use on the project for which the document was originally issued.
5. Ordnance Survey Ireland Licence Number EN 0074021

Rev. No.	Date	REVISION NOTE	Drn. By	Chkd. By
P01	12.02.2021	ISSUED TO IRISH WATER	IK	NB

Architect	OMP
Project	Proposed Residential Development at Frankfort Castle.
Title	Surface Water Longitudinal Sections
Dwg. No.	H081-CSC-XX-XX-DR-C-0010

Date	Drn by	Chkd by	Aprvd by	Scale	Revision
FEB 2021	IK	AB	NB	H 1:500; V 1:250	P01

CS Consulting Group
DUBLIN | LONDON | LIMERICK
Head Office
19-22 Dame Street, Dublin 2.
T: +353 (0)1 5480863 F: +353 (0)1 9011355
e: info@csconsulting.ie
w: www.csconsulting.ie

NSAI Certified
Quality I.S. EN ISO 9001:2008
Environment I.S. EN ISO 14001:2004
Energy I.S. EN ISO 50001:2011
Health & Safety OHSAS 18001:2007